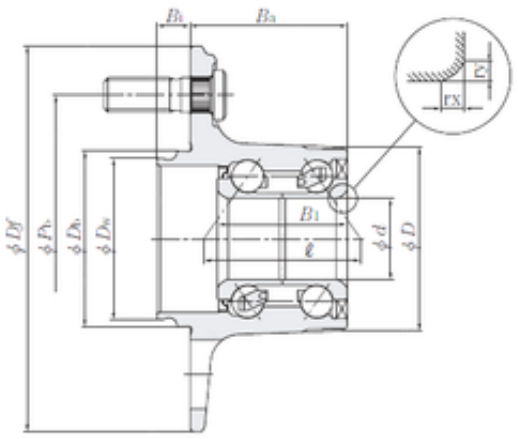

HUB186-6 Bearing 2D drawings and 3D CAD models

# NTN HUB186-6 Angular contact ball bearing

**Bearing No. HUB186-6**

| | |
|---|---|
| Bore Diameter | 30 mm |
| Outer Diameter | 67 mm |
| d | 30 mm |
| D | 67 mm |
| rx | 3,5 mm |
| ry | 2,5 mm |
| Ba | 56 mm |
| Db | 64 mm |
| Df | 139 mm |
| Pb | 114,3 mm |
| Bi | 12,5 mm |
| B1 | 51 mm |
| Dw | 64 mm |
| ℓ | 61,4 Tolerance h14 |
| Weight | 1,8 Kg |
| Basic dynamic load rating (C) | 29,5 kN |
| Basic static load rating (C0) | 20,2 kN |